REVISIONS				
ER	REV	DESCRIPTION	DATE	APPROVAL
WL005	-	INITIAL DRAWING	7/16/21	TLC

▷ NOTES

1. STANDARD GLAZING OPTION – .125" MINIMUM DSB GLAZING MEETS UNIFORM STATIC DESIGN PRESSURES SHOWN ON THIS DRAWING. GLAZING SHALL HAVE A MAXIMUM HEIGHT OF 6.70" AND A MAXIMUM LENGTH OF 24.00". GLAZING IS NOT IMPACT RESISTANT AND DOES NOT MEET THE REQUIREMENTS FOR WIND-BORNE DEBRIS REGIONS.

2. ALUMINUM FULL VIEW OPTION – ALUMINUM FULL VIEW SECTION MAY REPLACE ANY SECTION EXCEPT TOP AND BOTTOM PANELS. ALUMINUM FULL VIEW SECTION SHALL HAVE RAILS AND STILES OF EXTRUDED ALUMINUM ALLOY 6063-T6 WITH A 2-1/4" INTRAGRAL FIN AND .125" MINIMUM DSB GLAZING INSTALLED WITH ALUMINUM RETAINERS IN ORDER TO MEET UNIFORM STATIC DESIGN PRESSURES SHOWN ON THIS DRAWING. AFV PANEL SIZE IS 45.5"x21.9" (MAX). GLAZING IS NOT IMPACT RESISTANT AND DOES NOT MEET THE REQUIREMENTS FOR WIND-BORNE DEBRIS REGIONS.

3. MINIMUM OF 1" OVERLAP ON BOTH JAMBS REQUIRED TO MEET NEGATIVE DESIGN PRESSURES.

4. SLIDE LOCK OR OPERATOR REQUIRED.

5. SECTION STEEL TO HAVE THE FOLLOWING MINIMUM THICKNESS:
421, 423 – 20 GA
427, 429 – 24 GA
434, 436 – 25 GA

6. THE DESIGN OF THE SUPPORTING STRUCTURAL ELEMENTS SHALL BE THE RESPONSIBILITY OF THE PROFESSIONAL OF RECORD FOR THE BUILDING OR STRUCTURE AND IN ACCORDANCE WITH CURRENT BUILDING CODES FOR THE LOADS LISTED ON THIS DRAWING.

7. TRACK CLIPS SHALL BE LOCATED WITH CENTERLINE OF BOTTOM CLIP SPACED 10" MAX FROM BOTTOM OF TRACK AND REMAINING TRACK CLIPS SPACED AT 24" O.C. MAX. SPACING BETWEEN TOP TRACK CLIP AND SPLICE PLATE SHALL BE 30" O.C. MAX.

8. WHEN MOUNTING TO WOOD, DOOR JAMB TO BE MINIMUM 2x6 STRUCTURAL GRADE LUMBER. REFER TO JAMB CONNECTION SUPPLEMENT FOR ATTACHMENT TO SUPPORTING STRUCTURE.

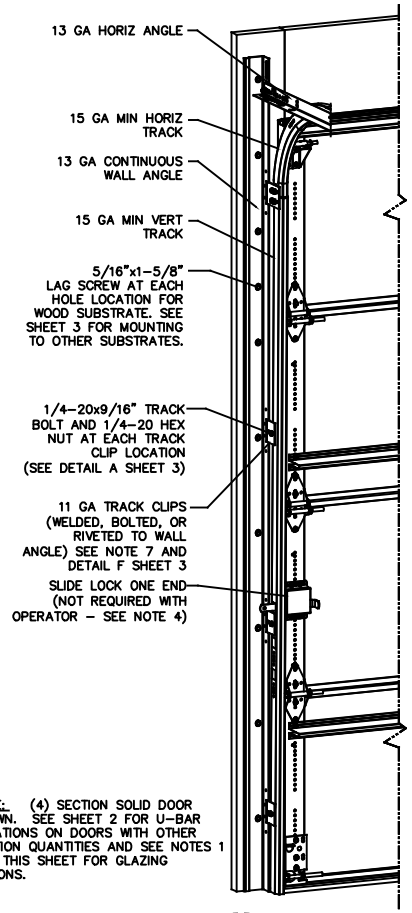

NOTE: (4) SECTION SOLID DOOR SHOWN. SEE SHEET 2 FOR U-BAR LOCATIONS ON DOORS WITH OTHER SECTION QUANTITIES AND SEE NOTES 1 & 2 THIS SHEET FOR GLAZING OPTIONS.

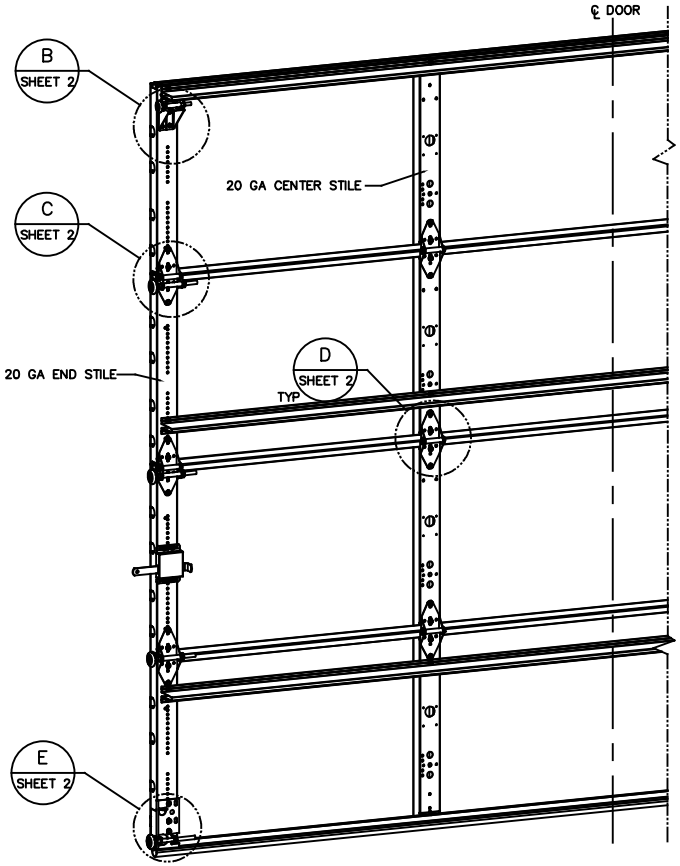

SUPERIMPOSED DESIGN PRESSURE LOADS ON SUPPORTING STRUCTURE		
MAX DOOR WIDTH	DOOR HEIGHT	MAX UNIFORM LOAD EACH JAMB (PLF)
10'-4"	ALL	+107.6/-121.5

J. C. VOELKEL, PE
LICENSE
No 82229
STATE OF
FLORIDA
PROFESSIONAL ENGINEER
J. CHRISTIAN VOELKEL, PE
312 N. NEW WARRINGTON ROAD, UNIT 1A
PENSACOLA, FLA
FL PE 82229
TX PE 133174

Digitally signed by John Christian Voelkel
Date: 2021.08.13 07:52:39 -05'00'

THE DOORS ARE DESIGNED AND MANUFACTURED TO COMPLY WITH THE 2018 IRC AND THE 2018 IBC.

STATIC PRESSURE RATINGS	APPROVED SIZES
DESIGN PRESSURE(PSF): +20.9/-23.6	MAX WIDTH: 10'-4"
	MAX HEIGHT: 24'-1"
IMPACT/CYCLIC RATED: NO	MAX SECTION HEIGHT: 24"

THE DRAWINGS AND ALL OTHER INFORMATION CONTAINED HEREIN ARE THE CONFIDENTIAL AND PROPRIETARY PROPERTY OF OVERHEAD DOOR CORPORATION AND ITS AFFILIATED COMPANIES. THIS DRAWING AND INFORMATION, IN WHOLE OR IN PART, MAY NOT BE COPIED IN ANY MANNER OR DISCLOSED TO ANYONE WITHOUT THE PRIOR WRITTEN CONSENT OF OVERHEAD DOOR CORPORATION. NO DISCLOSURE OF ANY OF THIS DRAWING OR INFORMATION IS INTENDED TO OPERATE AS A LICENSE OR AUTHORIZATION TO USE IT FOR ANY PURPOSE WITHOUT THE SPECIFIC WRITTEN CONSENT OF OVERHEAD DOOR CORPORATION.

REF DWG	USED ON

THIRD ANGLE PROJECTION

ASME Y14.100 AND Y14.5 APPLY, UNLESS OTHERWISE SPECIFIED. DIMENSIONS ARE IN U.S. CUSTOMARY UNITS.

TOLERANCES UNLESS OTHERWISE SPECIFIED

HOLE DIAMETER	WHOLE NUMBERS: ± .25
UNDER .251 +.004/-.003	.X ± .1
.251 TO .500 +.006/-.003	.XX ± .03
OVER .500 +.008/-.003	.XXX ± .010
FRACTIONS ± 1/16	ANGLES: ± .5°

FINISH N/A

UNIT OF MEASURE EA

The Genuine. The Original. OVERHEAD DOOR® LEWISVILLE, TEXAS

MATERIAL: N/A

	NAME	DATE
DRAWN BY	T CLARK	7/16/21
CHECKED BY	J QIAN	
APPROVED BY	T CLARK	

DRAWING TITLE: WINDLOAD, OPTION CODE 2073 SERIES 401/402/403/404/405/406, 20.9/-23.6 PSF, 10'-4" MAX

DRAWING NUMBER D-411980

SCALE N/A SHEET 1 OF 4

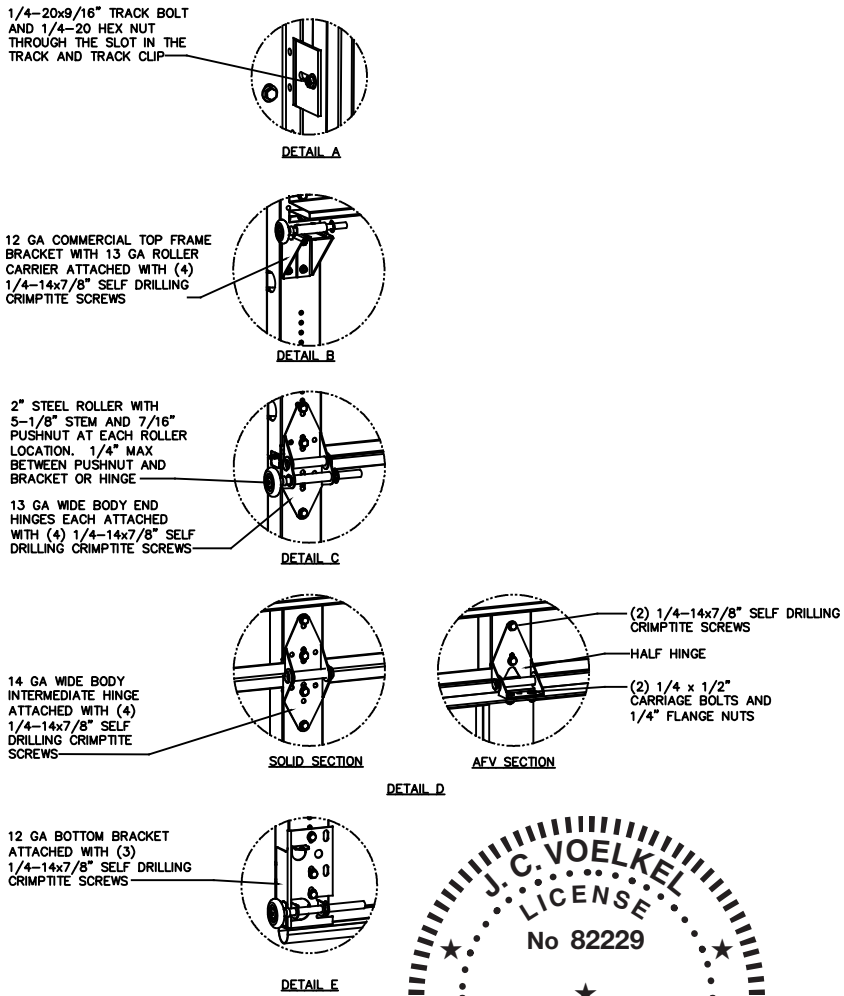

STATIC PRESSURE RATINGS	APPROVED SIZES
DESIGN PRESSURE(PSF): +20.9/–23.6	MAX WIDTH: 10'–4"
	MAX HEIGHT: 24'–1"
IMPACT/CYCLIC RATED: NO	MAX SECTION HEIGHT: 24"

J. C. VOELKEL LICENSE No 82229 STATE OF FLORIDA PROFESSIONAL ENGINEER

J. CHRISTIAN VOELKEL, PE
312 N. NEW WARRINGTON ROAD, UNIT 1A
PENSACOLA, FL
FL PE 82229
TX PE 133174

THE DRAWINGS AND ALL OTHER INFORMATION CONTAINED HEREIN ARE THE CONFIDENTIAL AND PROPRIETARY PROPERTY OF OVERHEAD DOOR CORPORATION AND ITS AFFILIATED COMPANIES. THIS DRAWING AND INFORMATION, IN WHOLE OR IN PART, MAY NOT BE COPIED IN ANY MANNER OR DISCLOSED TO ANYONE WITHOUT THE PRIOR WRITTEN CONSENT OF OVERHEAD DOOR CORPORATION. NO DISCLOSURE OF ANY OF THIS DRAWING OR INFORMATION IS INTENDED TO OPERATE AS A LICENSE OR AUTHORIZATION TO USE IT FOR ANY PURPOSE WITHOUT THE SPECIFIC WRITTEN CONSENT OF OVERHEAD DOOR CORPORATION.

REF DWG	USED ON

THIRD ANGLE PROJECTION

ASME Y14.100 AND Y14.5 APPLY, UNLESS OTHERWISE SPECIFIED ENGINEERING REF. IN U.S. CUSTOMARY UNITS

TOLERANCES UNLESS OTHERWISE SPECIFIED

HOLE DIAMETER	WHOLE NUMBERS:	± .25
UNDER .251 +.004/–.003	.X	± .1
.251 TO .500 +.006/–.003	.XX	± .03
OVER .500 +.008/–.003	.XXX	± .010
FRACTIONS	ANGLES:	± .5°
± 1/16		

FINISH N/A

UNIT OF MEASURE EA

The Genuine. The Original. OVERHEAD DOOR LEVITTVILLE, TEXAS

MATERIAL: N/A

	NAME	DATE
DRAWN BY	T CLARK	7/16/21
CHECKED BY	J QIAN	
APPROVED BY	T CLARK	

DRAWING TITLE: WINDLOAD, OPTION CODE 2073 SERIES 401/402/403/404/405/406, 20.9/–23.6 PSF, 10'–4" MAX

DRAWING NUMBER D– 411980

SCALE N/A SHEET 2 OF 4

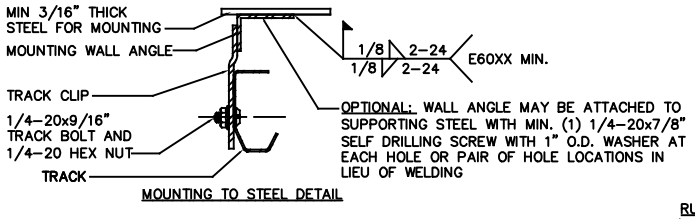

MOUNTING TO STEEL DETAIL

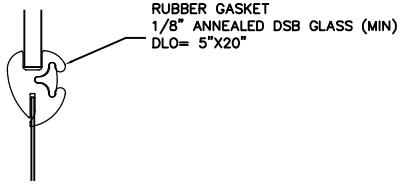

RUBBER FRAME GASKET (NON-INSULATED DOORS)

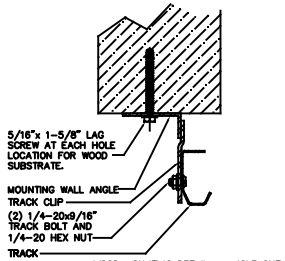

WOOD MOUNTING DETAIL - ANGLE OUT

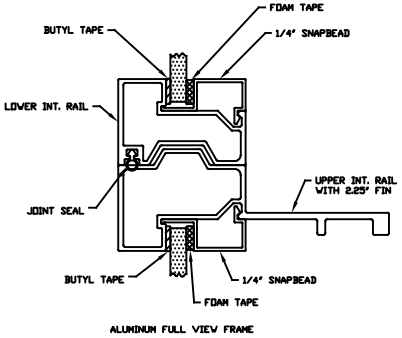

ALUMINUM FULL VIEW FRAME

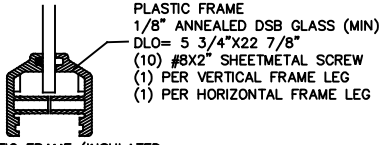

PLASTIC FRAME (INSULATED DOORS)

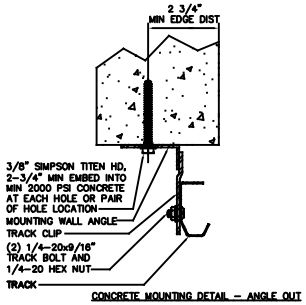

CONCRETE MOUNTING DETAIL - ANGLE OUT

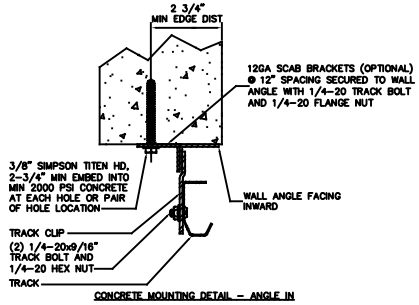

CONCRETE MOUNTING DETAIL - ANGLE IN

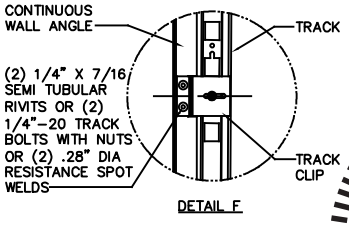

DETAIL F

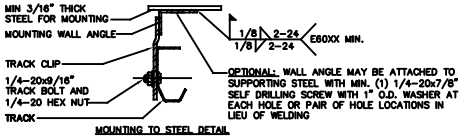

MOUNTING TO STEEL DETAIL

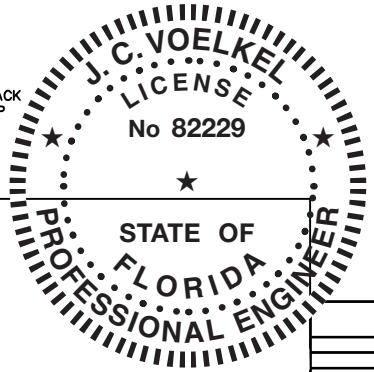

J. CHRISTIAN VOELKEL, PE
312 N. NEW WARRINGTON ROAD, UNIT 1A
PENSACOLA, FL
FL PE 82229
TX PE 133174

STATIC PRESSURE RATINGS	APPROVED SIZES
DESIGN PRESSURE(PSF): +20.9/-23.6	MAX WIDTH: 10'-4"
	MAX HEIGHT: 24'-1"
IMPACT/CYCLIC RATED: NO	MAX SECTION HEIGHT: 24"

THE DRAWINGS AND ALL OTHER INFORMATION CONTAINED HEREIN ARE THE CONFIDENTIAL AND PROPRIETARY PROPERTY OF OVERHEAD DOOR CORPORATION AND ITS AFFILIATED COMPANIES. THIS DRAWING AND INFORMATION, IN WHOLE OR IN PART, MAY NOT BE COPIED IN ANY MANNER OR DISCLOSED TO ANYONE WITHOUT THE PRIOR WRITTEN CONSENT OF OVERHEAD DOOR CORPORATION. NO DISCLOSURE OF ANY OF THIS DRAWING OR INFORMATION IS INTENDED TO OPERATE AS A LICENSE OR AUTHORIZATION TO USE IT FOR ANY PURPOSE WITHOUT THE SPECIFIC WRITTEN CONSENT OF OVERHEAD DOOR CORPORATION.

REF DWG	USED ON

THIRD ANGLE PROJECTION

ASME Y14.100 AND Y14.5 APPLY, UNLESS OTHERWISE SPECIFIED. DIMENSIONS ARE IN U.S. CUSTOMARY UNITS.

TOLERANCES UNLESS OTHERWISE SPECIFIED

HOLE DIAMETER	WHOLE NUMBERS:	± .25
UNDER .251 +.004/-.003	.X	± .1
.251 TO .500 +.006/-.003	.XX	± .03
OVER .500 +.008/-.003	.XXX	± .010
FRACTIONS	ANGLES:	± .5°
± 1/16		

FINISH: N/A

UNIT OF MEASURE: EA

The Genuine. The Original. OVERHEAD DOOR — LEWISVILLE, TEXAS

MATERIAL: N/A

	NAME	DATE
DRAWN BY	T CLARK	7/16/21
CHECKED BY	J QIAN	
APPROVED BY	T CLARK	

DRAWING TITLE: WINDLOAD, OPTION CODE 2073 SERIES 401/402/403/404/405/406, 20.9/-23.6 PSF, 10'-4" MAX

DRAWING NUMBER: D- 411980

SCALE: N/A SHEET 3 OF 4

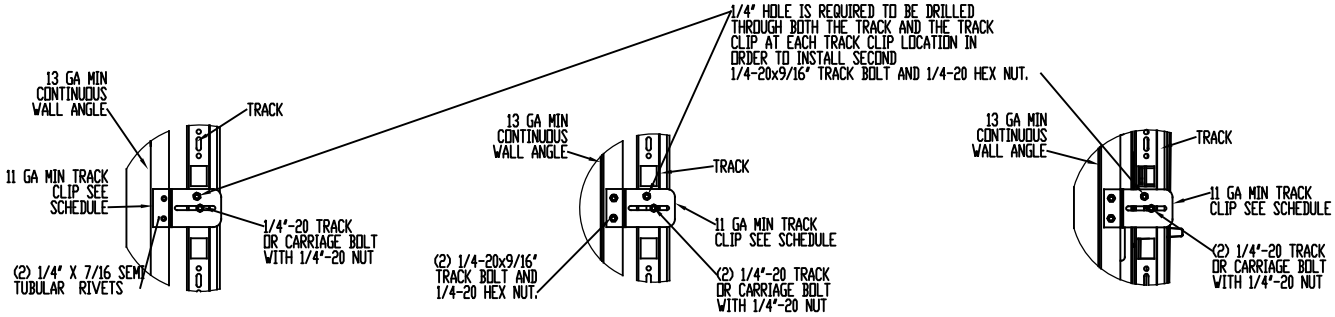

TYPICAL TRACK CLIP RIVETING DETAIL

TYPICAL TRACK CLIP BOLTING DETAIL

TYPICAL TRACK CLIP WELDING DETAIL

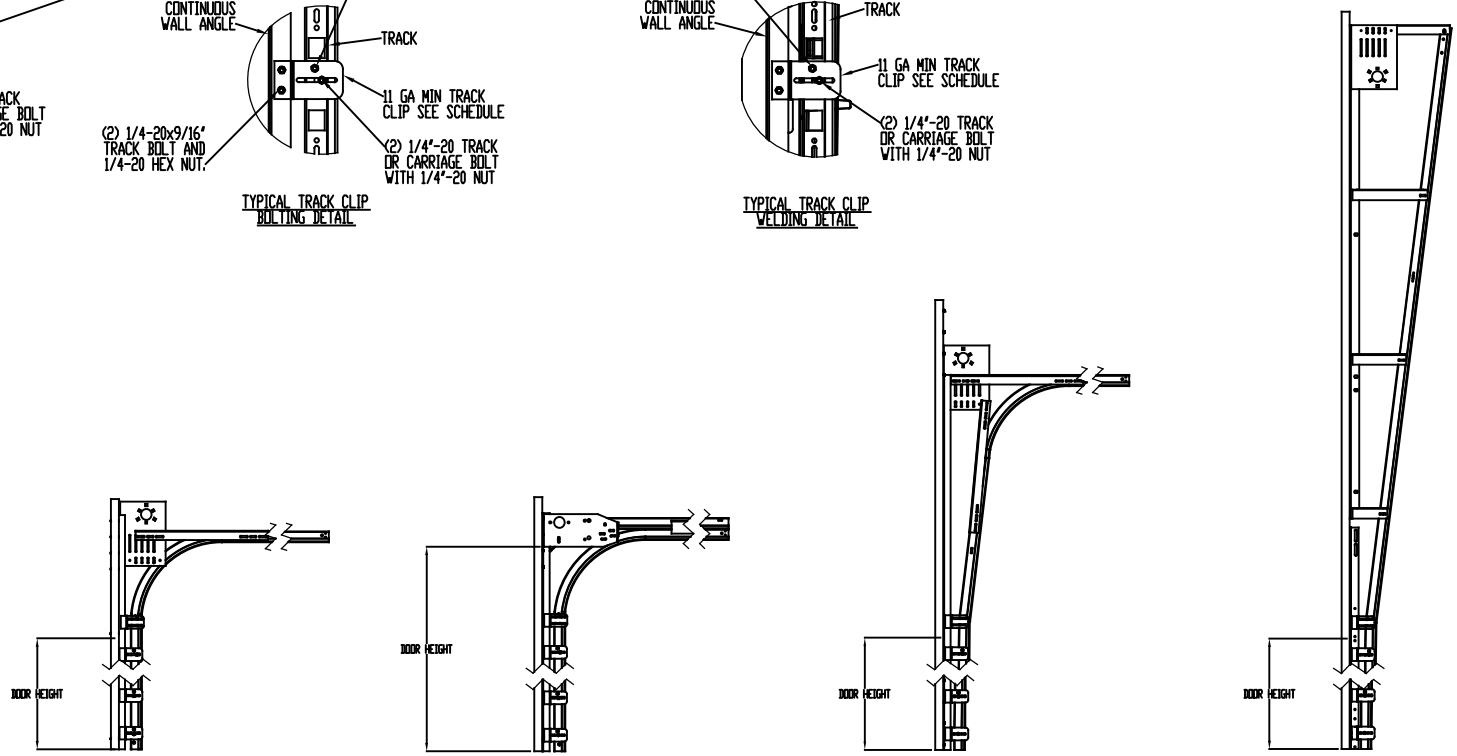

STANDARD LIFT TRACK DETAIL (OPTIONAL)

LOW HEADROOM TRACK DETAIL (OPTIONAL)

HIGH LIFT TRACK DETAIL (OPTIONAL)

VERTICAL LIFT TRACK DETAIL (OPTIONAL)

STATIC PRESSURE RATINGS	APPROVED SIZES
DESIGN PRESSURE(PSF): +20.9/-23.6	MAX WIDTH: 10'-4"
	MAX HEIGHT: 24'-1"
IMPACT/CYCLIC RATED: NO	MAX SECTION HEIGHT: 24"

J. C. VOELKEL LICENSE No 82229 STATE OF FLORIDA PROFESSIONAL ENGINEER

J. CHRISTIAN VOELKEL, PE
312 N. NEW WARRINGTON ROAD, UNIT 1A
PENSACOLA, FL
FL PE 82229
TX PE 133174

THE DRAWINGS AND ALL OTHER INFORMATION CONTAINED HEREIN ARE THE CONFIDENTIAL AND PROPRIETARY PROPERTY OF OVERHEAD DOOR CORPORATION AND ITS AFFILIATED COMPANIES. THIS DRAWING AND INFORMATION, IN WHOLE OR IN PART, MAY NOT BE COPIED IN ANY MANNER OR DISCLOSED TO ANYONE WITHOUT THE PRIOR WRITTEN CONSENT OF OVERHEAD DOOR CORPORATION. NO DISCLOSURE OF ANY OF THIS DRAWING OR INFORMATION IS INTENDED TO OPERATE AS A LICENSE OR AUTHORIZATION TO USE IT FOR ANY PURPOSE WITHOUT THE SPECIFIC WRITTEN CONSENT OF OVERHEAD DOOR CORPORATION.

REF DWG	USED ON

THIRD ANGLE PROJECTION

ASME Y14.100 AND Y14.5 APPLY, UNLESS OTHERWISE SPECIFIED. DRAWING IS IN U.S. CUSTOMARY UNITS.

TOLERANCES UNLESS OTHERWISE SPECIFIED

HOLE DIAMETER	WHOLE NUMBERS: ± .25
UNDER .251 +.004/-.003	.X ± .1
.251 TO .500 +.006/-.003	.XX ± .03
OVER .500 +.008/-.003	.XXX ± .010
FRACTIONS	ANGLES: ± .5°
± 1/16	

FINISH: N/A

UNIT OF MEASURE: EA

The Genuine. The Original. OVERHEAD DOOR® LEVITTVILLE, TEXAS

MATERIAL: N/A

	NAME	DATE
DRAWN BY	T CLARK	7/16/21
CHECKED BY	J QIAN	
APPROVED BY	T CLARK	

DRAWING TITLE: WINDLOAD, OPTION CODE 2073 SERIES 401/402/403/404/405/406, 20.9/-23.6 PSF, 10'-4" MAX

DRAWING NUMBER: D- 411980

SCALE: N/A SHEET 4 OF 4